Endocrine
https://doi.org/10.1007/s12020-023-03498-1

META- ANALYSIS

Is melatonin as an ergogenic hormone a myth? a systematic review and meta-analysis

Filipe Rios Drummond[1] · Lucas Rios Drummond[1,2] · Helton Oliveira Campos[1,3] · João Guilhermo Rios Pimenta Fernandes[1] · Mateus da Costa Monteiro[1] · Henrique Fernandes Gerspacher Lara[1] · Tito Cardoso de Almeida Mafra[1] · Victor Neiva Lavorato[1] · André Bahia Pereira[1] · Laura Hora Rios Leite[4] · Maristela de Oliveira Poletini[1] · Cândido Celso Coimbra[1]

Received: 21 March 2023 / Accepted: 16 August 2023
© The Author(s), under exclusive licence to Springer Science+Business Media, LLC, part of Springer Nature 2023

Abstract

Purpose Melatonin supplementation has been disclosed as an ergogenic substance. However, the effectiveness of melatonin supplementation in healthy subjects has not been systematically investigated. The present study analyzed the effects of melatonin supplementation on physical performance and recovery. In addition, it was investigated whether exercise bout or training alter melatonin secretion in athletes and exercise practitioners.

Methods This systematic review and meta-analysis were conducted and reported according to the guidelines outlined in the PRISMA statement. Based on the search and inclusion criteria, 21 studies were included in the systematic review, and 19 were included in the meta-analysis.

Results Melatonin supplementation did not affect aerobic performance relative to time trial (−0.04; 95% CI: −0.51 to 0.44) and relative to VO_2 (0.00; 95% CI: −0.57 to 0.57). Also, melatonin supplementation did not affect strength performance (0.19; 95% CI: −0.28 to 0.65). Only Glutathione Peroxidase (GPx) secretion increased after melatonin supplementation (1.40; 95% CI: 0.29 to 2.51). Post-exercise melatonin secretion was not changed immediately after an exercise session (0.56; 95% CI: −0.29 to 1.41) and 60 min after exercise (0.56; 95% CI: −0.29 to 1.41).

Conclusion The data indicate that melatonin is not an ergogenic hormone. In contrast, melatonin supplementation improves post-exercise recovery, even without altering its secretion.

Keywords Melatonin Supplementation · Physical Performance · Strength Performance · Aerobic Performance · Exercise Recovery · Melatonin Secretion

Introduction

Melatonin (N-acetyl-5-methoxytryptamine) is a hormone secreted by the pineal gland which has a chronobiotic role, which acts as an endogenous synchronizer regulating seasonal and circadian rhythms, and induces sleep [1–3]. The suprachiasmatic nucleus, a specialized group of nerve cells in the hypothalamus, responds to daily variations of light intensity to control the release of melatonin release, which increases up to 10-fold at night and decreases to the lowest levels during the day [4].

Exogenous melatonin is commonly consumed as a dietary supplement by individuals with difficulty in sleeping due to its drowsy effect on the central nervous system [5]. In addition to being used in sleep-related disorders, melatonin supplementation has also been administered for treating liver disease [6], heart failure [7], and metabolic syndrome, among other conditions [8]. The wide clinical applicability of melatonin supplementation is explained by its relative security, with low risk of adverse effects [9]. Oral melatonin is also absorbed rapidly and leads to peak values in plasma within approximately 1 h of ingestion [10]. The 5 mg dose,

✉ Cândido Celso Coimbra
coimbrac@icb.ufmg.br

1 Laboratório de Endocrinologia e Metabolismo, Departamento de Fisiologia e Biofísica, Universidade Federal de Minas Gerais, Belo Horizonte, MG, Brasil

2 Departamento de Educação Física, Universidade do Estado de Minas Gerais – Unidade Divinópolis, Divinópolis, MG, Brasil

3 Departamento de Ciências Biológicas, Universidade do Estado de Minas Gerais – Unidade Carangola, Carangola, MG, Brasil

4 Departamento de Fisiologia, Instituto de Ciências Biológicas, Universidade Federal de Juiz de Fora, Juiz de Fora, MG, Brasil

Published online: 01 September 2023

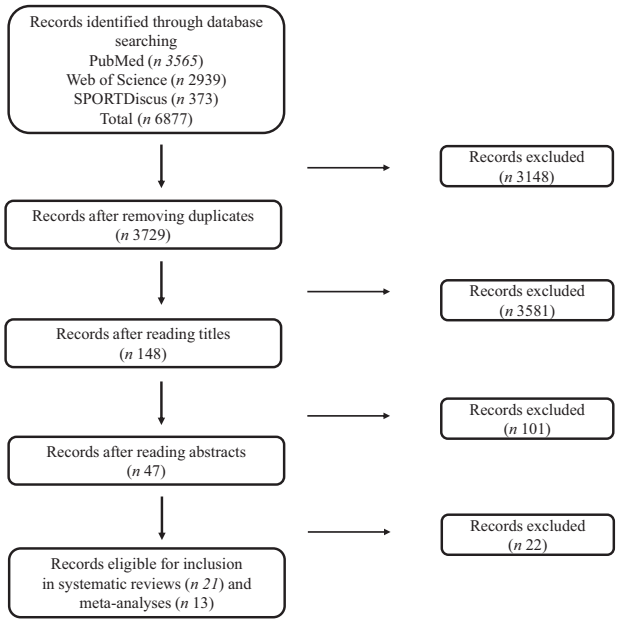

Fig. 1 Summary of the study selection process

which appears to be safe and effective, has about a 47 min elimination half-life [11].

One factor that can negatively impact exercise performance is sleep deprivation [12, 13]. Healthy sleep is considered critical to human physiological and cognitive function. Reduced sleep quality and quantity could result in an imbalance of the autonomic nervous system, which simulates overtraining syndrome symptoms [13]. Since sleep loss is a common occurrence prior to competition in athletes, it could significantly interfere on their athletic performance [13].

One important concern of athletes is whether they are getting good-quality sleep to such an extent that consuming melatonin is seriously taken into consideration. In fact, melatonin supplementation has been known to help athletes overcome the effects of jet lag following transmeridian travel [11, 14]. Although some studies show that exogenous melatonin increases exercise duration [15], possibly related to its healthy sleep promotion [11] and hypothermic effect [5] it is unclear whether this melatonin-mediated responses affects exercise performance. Two studies have reported that short-term supplementation with melatonin is able to significantly decrease intra-aural [12] and rectal [16] temperatures, nevertheless without interfering on grip strength and bicycle race performance [12], or on perceived exertion [16].

Melatonin consumption could also impact exercise performance through other actions such as increased glucose in muscle, reduced body mass, decreased muscle oxidative stress, prolonged muscle strength and better adaptation to physical effort [17]. Farjallah et al. (2018) observed prevention of inflammation, oxidative stress, and muscle damage after only a single dose of melatonin ingestion immediately before exercise [18]. Brandenberger et al. (2018) analyzed the long-term outcome of exogenous melatonin consumption on exercise performance and concluded that a 5 mg melatonin supplementation was unable to increase cycling performance [5]. Furthermore, studies with animal models have reported that exogenous melatonin consumption has a protective effect on muscle and liver glycogen storages [19–21] and an inducible effect on tissue repair and skeletal muscle healing after an exercise session [22].

Thus, there are pieces of evidence that melatonin supplementation can affect both exercise performance and recovery, however, it is unclear if exercise itself can affect melatonin secretion. There is still no consensus in the literature on this topic [17]. While some studies have shown an increase in post-exercise melatonin secretion [23–25], others did not observe such an effect [26, 27].

The possible effects of melatonin on exercise performance and recovery are still controversial and require further clarifications. Therefore, this systematic review and meta-analysis aimed at verifying the effects of melatonin supplementation on physical performance and recovery of athletes or physical activity practitioners, and whether melatonin secretion is affected by an exercise bout.

Methods

Search strategy

This systematic review and meta-analysis were conducted and reported according to the guidelines outlined in the PRISMA (Preferred Reporting Items for Systematic Reviews and Meta-Analysis) statement [28, 29], and protocol in PROSPERO (CRD42021243454). A systematic search of electronic databases, including PubMed, Web of Science and SPORTDiscus, was performed in January 2023 without any date restrictions. The search strategy used combinations of the following keywords: [("melatonin" OR "melatonin supplementation") AND ("performance" OR "effort" OR "resistance" OR "strength" OR "aerobic" OR "sport" OR "physical training" OR "exercise" OR "speed" OR "running" OR "power" OR "recovery" OR "recovery strategy" OR "recovery modality" OR "post-exercise")] (supplementary fig. 1).

Study selection

Studies that met the following criteria were included in this systematic review and meta-analysis: (i) healthy subjects (athletes and non-athletes), (ii) control-placebo studies, (iii)

studies that evaluated physical performance in response to melatonin supplementation, (iiii) studies that evaluated post-exercise recovery after melatonin supplementation, and (iiiii) studies that evaluated melatonin secretion after physical exercise or exercise training. Furthermore, all included studies were written in English. Reviews, abstracts, case studies, letters, and studies involving experimental research animals were not included, although this bibliography was consulted. Based on the search and inclusion/exclusion criteria, 21 and 13 studies were selected for inclusion in the systematic review and meta-analysis, respectively (Fig. 1).

Data grouping

The characteristics of the studies that evaluated physical performance in response to melatonin supplementation are shown in Table 1 (7 studies, 29 trials); the studies that evaluated post-exercise recovery after melatonin supplementation are shown in Table 2 (6 studies, 20 trials); the studies that evaluated melatonin secretion after physical exercise are shown in Table 3 (6 studies, 21 trials); and the studies that evaluated melatonin secretion after exercise training are shown in Table 4 (2 studies, 4 trials).

The studies selected for inclusion in the meta-analysis (13 studies, 18 trials, $n = 264$) were divided for analysis into the following topics: aerobic performance (relative to time trial) in response to melatonin supplementation (3 studies, 3 trials), aerobic performance (relative to VO_2) in response to melatonin supplementation (2 studies, 2 trials), strength performance (relative to handgrip) in response to melatonin supplementation (3 studies, 3 trials), recovery after exercise (relative to Glutathione peroxidase) in response to melatonin supplementation (3 studies, 3 trials), recovery after exercise (relative to Superoxide dismutase) in response to melatonin supplementation (2 studies, 2 trials), melatonin secretion after physical exercise (immediately after exercise) (3 studies, 3 trials) and), melatonin secretion after physical exercise (60 min after exercise) (2 studies, 2 trials).

It was not possible to analyze the effect of long-term physical training as there were not enough trials to perform a meta-analysis (Table 4). This analysis would be useful to understand better the possible physiological role of exercise-induced melatonin secretion in humans.

Risk of bias assessment

Two independent reviewers assessed the risk of bias using an adapted Grading of Recommendations Assessment, Development, and Evaluation (GRADE) instrument [30, 31]. Discrepant evaluations were settled via discussion with a third reviewer. This approach allowed us to evaluate the risk of bias in each study included in the present systematic review. Domains reflecting allocation concealment, blinding of participants and personnel, incomplete outcome data, selective outcome reporting, and other sources of bias were evaluated. Inadequacy in one of these domains reduced the methodological quality of each study according to the following sequence: high, moderate, low, and very low.

Statistical analysis

The mean and standard deviation values of the physical performance indexes in both the exercise rehabilitation and control trials were obtained from data provided in the consulted research papers. Heterogeneity was evaluated using the χ^2 test for homogeneity and the I^2 statistic. The effect size (Cohen's d or Hedges' g) was calculated for the physical performance indexes in each study. Then, a weighted-mean estimate of the effect size was calculated to account for differences in the sample sizes. The mean unweighted effect size and associated 95% confidence interval (CI) were also calculated. We used Cohen's classification of the effect size magnitude, where $\underline{d} < 0.20$=negligible effect; $\underline{d} = 0.20$–0.49 = small effect; $\underline{d} = 0.50$–0.79 = moderate effect; and $\underline{d} > 0.8$=large effect [32].

Results

Systematic review

A total of 6877 studies were identified through the database and reference searches. After removing the duplicates, and excluding papers that did not meet the eligibility criteria following a review of their titles, as well as their abstracts and full texts, 21 studies (63 trials, $n = 386$ individuals) were selected for inclusion in the systematic review (Fig. 1). The characteristics of the subjects, the exercise/physical training protocols and the melatonin supplementation characteristics of each study are summarized in Tables 1, 2, 3, and 4.

Meta-analyses

Aerobic performance (relative to time trial) in response to melatonin supplementation

After pooling the data from 3 trials (68 individuals), the mean effect size was −0.04 (95% CI: −0.51 to 0.44), which indicates that melatonin supplementation did not affect aerobic performance ($p > 0.05$; Fig. 2). According to a fixed effects analysis, no heterogeneity was observed among these studies ($I^2 = 0.0\%$; $Q = 0.18$, df=2, $p = 0.916$).

Table 1 Studies characteristics – physical performance

Reference	Characteristics of subjects	N° of subjects (♂/♀)	Age	Melatonin supplementation				Exercise		Variable of physical performance	Result
				Dose (mg)	Placebo	Days of supplementation	Supplementation schedule	Exercise protocol	Exercise schedule		
Atkinson et al. [11]	Healthy and physically active	(12/0)	19–30	5	NR	1	11:00 PM (30 min before bedtime)	Grip strength	07:30–08:30 AM	Left grip strength (Kg)	PLA: 42.1 ± 3.6 MEL: 41.7 ± 3.5 D = No
Atkinson et al. [11]	Healthy and physically active	(12/0)	19–30	5	NR	1	11:00 PMv(30 min before bedtime)	Grip strength	07:30–08:30 AM	Right grip strength (Kg)	PLA: 42.5 ± 5.2 MEL: 44.6 ± 2.2 D = No
Atkinson et al. [11]	Healthy and physically active	(12/0)	19–30	5	NR	1	11:00 PM (30 min before bedtime)	Time trial was performed on cycle ergometer	07:30–08:30 AM	Cycling time 4 km (s)	PLA: 381 ± 23 MEL: 380 ± 24 D = No
Atkinson et al. [12]	Healthy and physically active	(12/0)	25.2 ± 5.0	5	NR	1	11:45 PM	Grip strength	1:00 PM	Left grip strength (Kg)	PLA: 441 ± 66 MEL: 449 ± 82 D = No
Atkinson et al. [12]	Healthy and physically active	(12/0)	25.2 ± 5.0	5	NR	1	11:45 PM	Grip strength	1:00 PM	Right grip strength (Kg)	PLA: 475 ± 66 MEL: 470 ± 73 D = No
Atkinson et al. [12]	Healthy and physically active	(12/0)	25.2 ± 5.0	5	NR	1	11:45 PM	Time trial was performed on cycle ergometer	1:00 PM	Cycling time 4 km (s)	PLA: 389 ± 46 MEL: 398 ± 53 D = No
Atkinson et al. [12]	Healthy and physically active	(12/0)	25.2 ± 5.0	5	NR	1	11:45 PM	Grip strength	5:00 PM	Left grip strength (Kg)	PLA: 454 ± 60 MEL: 447 ± 59 D = No
Atkinson et al. [12]	Healthy and physically active	(12/0)	25.2 ± 5.0	5	NR	1	11:45 PM	Grip strength	5:00 PM	Right grip strength (Kg)	PLA: 483 ± 65 MEL: 478 ± 64 D = No

Table 1 (continued)

Reference	Characteristics of subjects	N° of subjects (♂/♀)	Age	Melatonin supplementation				Exercise		Variable of physical performance	Result
				Dose (mg)	Placebo	Days of supplementation	Supplementation schedule	Exercise protocol	Exercise schedule		
Atkinson et al. [12]	Healthy and physically active	(12/0)	25.2 ± 5.0	5	NR	1	11:45 PM	Time trial was performed on cycle ergometer	5:00 PM	Cycling time 4 km (s)	PLA: 403 ± 52 MEL: 405 ± 59 D = No
Brandenberger et al. [5]	Trained male	(10/0)	25.1 ± 4.0	5	Multivitamin	1	2:00 and 6:00 PM (15 min prior to exercise)	32.2 km cycling time trial on cycle ergometer.	2:00 and 6:00 PM	Time trial (min)	PLA: 65.3 ± 6.8 MEL: 64.9 ± 5.9 D = No
Brandenberger et al. [5]	Trained male	(10/0)	25.1 ± 4.0	5	Multivitamin	1	2:00 and 6:00 PM (15 min prior to exercise)	32.2 k cycling time trial on cycle ergometer.	2:00 and 6:00 PM	Mean time trial power output (W)	PLA: 190.0 ± 45.7 MEL: 190.4 ± 40.4 D = No
Brandenberger et al. [5]	Trained male	(10/0)	25.1 ± 4.0	5	Multivitamin	1	2:00 and 6:00 PM (15 min prior to exercise)	32.2 k cycling time trial on cycle ergometer.	2:00 and 6:00 PM	VO_2 ($ml.kg^{-1}.min^{-1}$)	PLA: 37.2 ± 5.3 MEL: 38.3 ± 5.8 D = No
Chiodera et al. [50]	Healthy male subjects	(14/0)	25–33	6	NR	1	08:30 AM	Test on cycle ergometer (initial load of 50 W was increased by 50 W every 3 min until exhaustion)	9:00 AM	VO_{2peak} (ml/min)	PLA: 2261 ± 145 MEL: 2242 ± 137 D = No
Ghattassi et al. [33]	Professional soccer players	(12/0)	22.9 ± 1.3	5	NR	1	09:00 PM	Squat jump	9:30 PM	Squat jump (cm)	PLA: 34.8 ± 2.5 MEL: 34.3 ± 2.8 D = No
Ghattassi et al. [33]	Professional soccer players	(12/0)	22.9 ± 1.3	5	NR	1	09:00 PM	Countermovement jump	9:30 PM	Countermovement jump (cm)	PLA: 36.2 ± 2.7 MEL: 36.0 ± 2.8 D = No
Ghattassi et al. [33]	Professional soccer players	(12/0)	22.9 ± 1.3	5	NR	1	09:00 PM	Medicine-ball throw	9:30 PM	Medicine-ball throw (m)	PLA: 4.0 ± 0.3 MEL: 4.0 ± 0.4 D = No

Table 1 (continued)

Reference	Characteristics of subjects	N° of subjects (♂/♀)	Age	Melatonin supplementation				Exercise		Variable of physical performance	Result
				Dose (mg)	Placebo	Days of supplementation	Supplementation schedule	Exercise protocol	Exercise schedule		
Ghattassi et al. [33]	Professional soccer players	(12/0)	22.9 ± 1.3	5	NR	1	09:00 PM	Medicine-ball throw	9:30 PM	Medicine-ball throw (m)	PLA: 10.9 ± 0.6 MEL: 10.8 ± 0.5 D = No
Ghattassi et al. [33]	Professional soccer players	(12/0)	22.9 ± 1.3	5	NR	1	09:00 PM	Handgrip strength	9:30 PM	Handgrip strength (kg)	PLA: 45.6 ± 5.6 MEL: 46.4 ± 6.0 D = Yes
Ghattassi et al. [33]	Professional soccer players	(12/0)	22.9 ± 1.3	5	NR	1	09:00 PM	Modified agility t-test	9:30 PM	Modified agility t-test (m)	PLA: 6.3 ± 0.3 MEL: 6.3 ± 0.4 D = No
Ghattassi et al. [33]	Professional soccer players	(12/0)	22.9 ± 1.3	8	NR	1	09:00 PM	Squat jump	9:30 PM	Squat jump (cm)	PLA: 34.8 ± 2.5 MEL: 29.2 ± 2.7 D = No
Ghattassi et al. [33]	Professional soccer players	(12/0)	22.9 ± 1.3	8	NR	1	09:00 PM	Countermovement jump	9:30 PM	Countermovement jump (cm)	PLA: 36.2 ± 2.7 MEL: 30.9 ± 2.5 D = No
Ghattassi et al. [33]	Professional soccer players	(12/0)	22.9 ± 1.3	8	NR	1	09:00 PM	Medicine-ball throw	9:30 PM	Medicine-ball throw (m)	PLA: 4.0 ± 0.3 MEL: 3.8 ± 0.4 D = No
Ghattassi et al. [33]	Professional soccer players	(12/0)	22.9 ± 1.3	8	NR	1	09:00 PM	Five jumps	9:30 PM	Five jumps (m)	PLA: 10.9 ± 0.6 MEL: 10.7 ± 0.6 D = No
Ghattassi et al. [33]	Professional soccer players	(12/0)	22.9 ± 1.3	8	NR	1	09:00 PM	Handgrip strength	9:30 PM	Handgrip strength (kg)	PLA: 45.6 ± 5.6 MEL: 40.0 ± 2.9 D = No

Table 1 (continued)

Reference	Characteristics of subjects	N° of subjects (♂/♀)	Age	Melatonin supplementation				Exercise		Variable of physical performance	Result
				Dose (mg)	Placebo	Days of supplementation	Supplementation schedule	Exercise protocol	Exercise schedule		
Ghattassi et al. [33]	Professional soccer players	(12/0)	22.9 ± 1.3	8	NR	1	09:00 PM	Modified agility t-test	9:30 PM	Modified agility t-test (m)	PLA: 6.3 ± 0.3 MEL: 6.2 ± 0.3 D = No
Mero et al. [51]	Resistance-trained male	(10/0)	24 ± 3	6	NR	2 weeks	10:00–11:00 AM	Resistance training for 2 weeks, 25 sets, 80 min per day.	11:00–12:00 AM	Countermovement jump (m)	PLA: 0.30 ± 0.04 MEL: 0.30 ± 0.04 D = No
Mero et al. [51]	Resistance-trained male	(10/0)	24 ± 3	6	NR	2 weeks	10:00–11:00 AM	Resistance training for 2 weeks, 25 sets, 80 min per day.	11:00–12:00 AM	Squat jump (kg)	PLA: 94.0 ± 11.7 MEL: 90.5 ± 15.7 D = No
Mero et al. [51]	Resistance-trained male	(10/0)	24 ± 3	6	NR	2 weeks	10:00–11:00 AM	Resistance training for 2 weeks, 25 sets, 80 min per day.	11:00–12:00 AM	Bench press (kg)	PLA: 80.3 ± 12.5 MEL: 81.4 ± 14.5 D = No
Trionfante et al. [52]	Healthy university students	(12/12)	24 ± 2.4 (man) 24 ± 1.1 (woman)	6 (2x)	Methylcellulose	1	Morning 30 min before exercise	Walking on the treadmill using the Naughton protocol	Morning	VO_2 at which the participants achieved 50% CHO usage ($L.min^{-1}$)	PLA: 1.2 ± 0.5 MEL: 0.8 ± 0.5 D = Yes

♂, Male; ♀, female; *PLA* Placebo Group, *MEL* Melatonin Group, *D* statistical difference, *NR* note reported, *CHO* carbohydrates, *VO_2* oxygen consumption

Aerobic performance (relative to VO2) in response to melatonin supplementation

After pooling the data from 2 trials (44 individuals), the mean effect size was 0.00 (95% CI: −0.57 to 0.57), which indicates that melatonin supplementation did not affect aerobic performance ($p > 0.05$; Fig. 3). According to a fixed effects analysis, no heterogeneity was observed among these studies ($I^2 = 0.0\%$; $Q = 0.29$, df=1, $p = 0.592$).

Strength performance (relative to handgrip) in response to melatonin supplementation

After pooling the data from 3 trials (72 individuals), the mean effect size was 0.19 (95% CI: −0.28 to 0.65), which indicates that melatonin supplementation did not affect strength performance ($p > 0.05$; Fig. 4). According to a fixed effects analysis, no heterogeneity was observed among these studies ($I^2 = 0.0\%$; $Q = 1.0$, df=2, $p = 0.606$).

Recovery after exercise (relative to GPx) in response to melatonin supplementation

After pooling the data from 3 trials (54 individuals), the mean effect size was 1.40 (95% CI: 0.29 to 2.51), which indicates that melatonin supplementation had a large and significant positive effect on exercise recovery ($p < 0.05$; Fig. 5). A fixed effects analysis observed high heterogeneity among these studies ($I^2 = 65.5\%$; $Q = 5.79$, df=2, $p = 0.055$).

Recovery after exercise (relative to SOD) in response to melatonin supplementation

After pooling the data from 2 trials (34 individuals), the mean effect size was 0.48 (95% CI: −2.00 to 2.96), which indicates that melatonin supplementation did not affect on exercise recovery ($p > 0.05$; Fig. 6). According to a random effects analysis, high heterogeneity was observed among these studies ($I^2 = 90.5\%$; $Q = 10.49$, df=1, $p = 0.001$).

Melatonin secretion immediately after physical exercise

After pooling the data from 3 trials (56 individuals), the mean effect size was 1.81 (95% CI: −0.03 to 3.64), which indicates that acute exercise did not affect on melatonin secretion levels ($p > 0.05$; Fig. 7). High heterogeneity was observed among these studies according to a random effects analysis ($I^2 = 86.3\%$; $Q = 14.65$, df=2, $p = 0.001$).

Melatonin secretion 60 min after physical exercise

After pooling the data from 2 trials (28 individuals), the mean effect size was 0.56 (95% CI: −0.29 to 1.41), which indicates that acute exercise did not affect on melatonin secretion levels on melatonin secretion levels ($p > 0.05$; Fig. 8). High heterogeneity was observed among these studies according to a random effects analysis ($I^2 = 87.4\%$; $Q = 7.96$, df=1, $p = 0.005$).

Discussion

The present systematic review and meta-analysis demonstrates that melatonin supplementation does not act as an ergogenic. On the other hand, melatonin supplementation improves exercise recovery after a physical exercise session. The results also indicate that acute physical exercise does not affect melatonin secretion. These conclusions were based on studies with high heterogeneity, suggesting that further evidence is necessary to establish the physiological role of melatonin on exercise performance and recovery in humans. Such knowledge would be valuable for athletes and exercise practitioners as a guide to support decisions regarding the use of melatonin supplementation as a physical performance and recovery enhancer.

It is common sense that athletes or physically active individuals need good quality sleep on a regular schedule, and adequate rest and recovery after exercise so that the muscles can repair, rebuild, and strengthen to perform better in training programs. In fact, a recent review brought up strong evidence that these individuals ingest exogenous melatonin with such purpose [17]. This same review detailed some physiological effects that could be related to the increased exercise performance caused by melatonin supplementation, such as increased glucose in muscle, reduced body mass, decreased muscle oxidative stress, prolonged muscle strength and better adaptation to physical effort [17]. In fact, melatonin supplementation did not affect physical performance, i.e., it does not act as an ergogenic. Although there is evidence of a negative impact of melatonin on exercise performance [33], this is based on the evaluation of hand-grip strength, squat jump, and countermovement jump exercises performed 30 min after ingestion of 8 mg of melatonin [33], which is a higher dose than the one mostly adopted by the selected studies of the current meta-analysis (~5 or 6 mg). However, it is worth noting that an 8 mg dose of melatonin supplementation before other trials, such as medicine ball throw, five jump and modified agility *t*-test, did not affect exercise performance [33]. In these cases, it is also possible that the 30 min interval between melatonin ingestion and the initiation of the exercise tasks was perhaps not long enough to exert a pronounced effect on performance measurements [33]. Because doses of 0.1–10 mg melatonin administrated at midday in young healthy men negatively affects sleepiness, fatigue, alertness, balance, coordination, and vigilance performance

Table 2 Studies characteristics – recovery after exercise

Reference	N° of subjects (♂♀)	Characteristics of subjects	Age	Melatonin supplementation				Exercise			
				Dose (mg)	Placebo substance	Days of supplementation	Supplementation schedule	Exercise protocol	Exercise schedule	Variable	Result
Ochoa et al. [46]	(20/0)	Amateur athletes, highly trained	-	3	NR	3	Morning (1 h before physical test)	Run 50 km across the highest road of Europe	Morning	Melatonin (pg/mL)	PLA: 0.3 ± 0.1 MEL: 74.2 ± 4.7 D = Yes
Ochoa et al. [46]	(20/0)	Amateur athletes, highly trained	-	3	NR	3	Morning (1 h before physical test)	Run 50 km across the highest road of Europe	Morning	CAT (K/seg.mg)	PLA: 0.43 ± 0.02 MEL: 0.51 ± 0.02 D = Yes
Ochoa et al. [46]	(20/0)	Amateur athletes, highly trained	-	3	NR	3	Morning (1 h before physical test)	Run 50 km across the highest road of Europe	Morning	GPx (U/mg)	PLA: 84.8 ± 2.5 MEL: 96.7 ± 3.7 D = Yes
Ochoa et al. [46]	(20/0)	Amateur athletes, highly trained	-	3	NR	3	Morning (1 h before physical test)	Run 50 km across the highest road of Europe	Morning	TAS (nmol/mg protein)	PLA: 14.2 ± 0.4 MEL: 16.9 ± 0.4 D = Yes
Ochoa et al. [46]	(20/0)	Amateur athletes, highly trained	-	3	NR	3	Morning (1 h before physical test)	Run 50 km across the highest road of Europe	Morning	TNF-α (pg/ml)	PLA: 27.8 ± 1.6 MEL: 16.6 ± 1.6 D = Yes
Ochoa et al. [46]	(20/0)	Amateur athletes, highly trained	-	3	NR	3	Morning (1 h before physical test)	Run 50 km across the highest road of Europe	Morning	IL-6 (pg/ml)	PLA: 40.4 ± 6.0 MEL: 48.2 ± 4.9 D = No
Ochoa et al. [46]	(20/0)	Amateur athletes, highly trained	-	3	NR	3	Morning (1 h before physical test)	Run 50 km across the highest road of Europe	Morning	IL-1 (pg/ml)	PLA: 378.8 ± 45.5 MEL: 618.2 ± 60.6 D = Yes
Ochoa et al. [46]	(20/0)	Amateur athletes, highly trained	-	3	NR	3	Morning (1 h before physical test)	Run 50 km across the highest road of Europe	Morning	TNF-RIII	PLA: 4.1 ± 0.2 MEL: 6.0 ± 0.3 D = Yes

Table 2 (continued)

Reference	N° of subjects (♂♀)	Characteristics of subjects	Age	Melatonin supplementation				Exercise			
				Dose (mg)	Placebo substance	Days of supplementation	Supplementation schedule	Exercise protocol	Exercise schedule	Variable	Result
Farjallah et al. [53]	(20/0)	Soccer players	18.8 ± 1.3	5	NR	6	7:00 PM (Ingested after the second training session)	Soccer intensive training camp	Morning and afternoon	Uric acid (μmol/L)	PLA: 299.9 ± 33.2 MEL: 301.9 ± 54.4 D = No
Farjallah et al. [53]	(20/0)	Soccer players	18.8 ± 1.3	5	NR	6	7:00 PM (Ingested after the second training session)	Soccer intensive training camp	Morning and afternoon	Total bilirubin (μmol/L)	PLA: 16.9 ± 10.1 MEL: 16.8 ± 6.2 D = No
Farjallah et al. [53]	(20/0)	Soccer players	18.8 ± 1.3	5	NR	6	7:00 PM (Ingested after the second training session)	Soccer intensive training camp	Morning and afternoon	Creatine Kinase (IU/L)	PLA: 366.6 ± 99.6 MEL: 236.5 ± 121.0 D = Yes
Farjallah et al. [53]	(20/0)	Soccer players	18.8 ± 1.3	5	NR	6	7:00 PM (Ingested after the second training session)	Soccer intensive training camp	Morning and afternoon	Aspartate aminotransferase (IU/L)	PLA: 24.1 ± 2.5 MEL: 21.9 ± 1.6 D = No
Farjallah et al. [53]	(20/0)	Soccer players	18.8 ± 1.3	5	NR	6	7:00 PM (Ingested after the second training session)	Soccer intensive training camp	Morning and afternoon	Alanine aminotransferase (IU/L)	PLA: 13.7 ± 3.2 MEL: 13.8 ± 5.2 D = No
Farjallah et al. [53]	(20/0)	Soccer players	18.8 ± 1.3	5	NR	6	7:00 PM (Ingested after the second training session)	Soccer intensive training camp	Morning and afternoon	AOPP (mmol/mg protein)	PLA: 0.32 ± 0.02 MEL: 0.30 ± 0.31 D = No
Farjallah et al. [53]	(20/0)	Soccer players	18.8 ± 1.3	5	NR	6	7:00 PM (Ingested after the second training session)	Soccer intensive training camp	Morning and afternoon	GPx (mU/mg)	PLA: 78.0 ± 3.7 MEL: 84.6 ± 2.0 D = No
Farjallah et al. [53]	(20/0)	Soccer players	18.8 ± 1.3	5	NR	6	7:00 PM (Ingested after the second training session)	Soccer intensive training camp	Morning and afternoon	GR (mmol/mg protein)	PLA: 1.6 ± 0.1 MEL: 2.2 ± 0.2 D = No

Table 2 (continued)

Reference	N° of subjects (♂♀)	Characteristics of subjects	Age	Melatonin supplementation				Exercise			
				Dose (mg)	Placebo substance	Days of supplementation	Supplementation schedule	Exercise protocol	Exercise schedule	Variable	Result
Farjallah et al. [54]	(20/0)	Soccer players	18.9 ± 1.3	5	NR	6	7:00 PM (Ingested after the second training session)	Soccer intensive training camp	Morning and afternoon	Malondialdehyde (μmol/L)	PLA: 1.9 ± 0.2 MEL: 1.7 ± 0.3 D = No
Farjallah et al. [54]	(20/0)	Soccer players	18.9 ± 1.3	5	NR	6	7:00 PM (Ingested after the second training session)	Soccer intensive training camp	Morning and afternoon	Superoxide dismutase (U/g protein)	PLA: 681.0 ± 52.0 MEL: 772.7 ± 48.9 D = No
Farjallah et al. [54]	(20/0)	Soccer players	18.9 ± 1.3	5	NR	6	7:00 PM (Ingested after the second training session)	Soccer intensive training camp	Morning and afternoon	Creatine Kinase (IU/L)	PLA: 366.6 ± 99.6 MEL: 236.5 ± 121.0 D = Yes
Farjallah et al. [54]	(20/0)	Soccer players	18.9 ± 1.3	5	NR	6	7:00 PM (Ingested after the second training session)	Soccer intensive training camp	Morning and afternoon	Lactate dehydrogenase (IU/L)	PLA: 280.7 ± 77.4 MEL: 246.9 ± 32.4 D = No
Farjallah et al. [18]	(0/15)	Handball players	17.4 ± 0.4	6	NR	8	90 min before training	Handball specific physical training	9:00 AM and 4:00 PM	Lactate	PLA: 9.2 ± 1.2 MEL: 8.9 ± 0.8 D = Yes
Ortiz-Franco et al. [41]	(14/0)	Healthy athletes	20–37	20	NR	14	Before exercise	Strength training and HIIT	-	TAC (μmol/L)	PLA: 2061.2 ± 214.3 MEL: 2387.7 ± 153.1 D = No
Ortiz-Franco et al. [41]	(14/0)	Healthy athletes	20–37	20	NR	14	Before exercise	Strength training and HIIT	-	TAC 24 h (μmol/L)	PLA: 2265.0 ± 122.4 MEL: 2836.7 ± 193.8 D = No
Ortiz-Franco et al. [41]	(14/0)	Healthy athletes	20–37	20	NR	14	Before exercise	Strength training and HIIT	-	GPx (mU/mL)	PLA: 170.7 ± 12.8 MEL: 209.1 ± 11.0 D = No

Table 2 (continued)

Reference	N° of subjects (♂♀)	Characteristics of subjects	Age	Melatonin supplementation				Exercise			
				Dose (mg)	Placebo substance	Days of supplementation	Supplementation schedule	Exercise protocol	Exercise schedule	Variable	Result
Ortiz-Franco et al. [41]	(14/0)	Healthy athletes	20–37	20	NR	14	Before exercise	Strength training and HIIT	-	GPx 24 h (mU/mL)	PLA: 186.0 ± 17.1 MEL: 183.5 ± 4.9 D = No
Ortiz-Franco et al. [41]	(14/0)	Healthy athletes	20–37	20	NR	14	Before exercise	Strength training and HIIT	-	SOD (U/mL)	PLA: 226.0 ± 2.6 MEL: 224.0 ± 2.2 D = No
Ortiz-Franco et al. [41]	(14/0)	Healthy athletes	20–37	20	NR	14	Before exercise	Strength training and HIIT	-	SOD 24 h (U/mL)	PLA: 224.7 ± 1.4 MEL: 228.3 ± 2.8 D = No
Ortiz-Franco et al. [41]	(14/0)	Healthy athletes	20–37	20	NR	14	Before exercise	Strength training and HIIT	-	DNA damage (tail percentage)	PLA: 58.5 ± 19.0 MEL: 37.5 ± 19.7 D = Yes
Ziadini et al. [55]	(0/20)	Sedentary young women	24.2 ± 1.03	3	NR	8 weeks	-	Running exercise training	2:00 PM	Malondialdehyde (nmol/mL)	PLA: −19.49 ± 2.8 MEL: −25.2 ± 2.8 D = Yes

♂ Male, ♀ female, *PLA* Placebo Group, *MEL* Melatonin Group, *D* statistical difference, *NR* not reported

Table 3 Studies characteristics – Melatonin secretion after physical exercise

Reference	N° of subjects (♂/♀)	Characteristics of subjects	Age	Exercise protocol	Exercise schedule	Modality	Sample collection time	Result
Killic et al. [27]	(10/0)	Healthy sedentary males	22.2 ± 0.2	Running on the treadmill until exhaustion	Day	Running	10:00 AM and immediately after exercise until exhaustion	PRE: 3.4 ± 0.2 POST: 3.6 ± 0.1 D = No
Killic et al. [27]	(10/0)	Healthy sedentary males	22.2 ± 0.2	Running on the treadmill until exhaustion	Night	Running	12:00 PM and immediately after exercise until exhaustion	PRE: 4.3 ± 0.2 POST: 4.4 ± 0.3 D=No
Konarska et al. [25]	(11/0)	Volleyball players	16.0 ± 0.4	Progressive test on cycle ergometer	8:00 AM - 11:00 AM	Volleyball	Before the exercise and 3' after its completion	PRE: 15.2 POST: 18.6 D=Yes
Konarska et al. [25]	(11/0)	Volleyball players	16.0 ± 0.4	Aerobic exercise	8:00 AM - 11:00 AM	Volleyball	Before the exercise and 3' after its completion	PRE: 18.2 POST: 10.9 D=Yes
Carr et al. [24]	(0/7)	Women not engaged in physical training programs	18–30	Running, 8 weeks, 1 h/day, 80% HR_{max}	1:00 PM - 6:00 PM	Running	At the beginning and at 30' after the exercise test	PRE: 54.7 ± 17.4 POST: 105.2 ± 24.9 D = Yes
Carr et al. [24]	(0/7)	Women not engaged in physical training programs	18–30	Running, 8 weeks, 1 h/day, 80% HR_{max}	1:00 PM - 6:00 PM	Running	At the beginning and at 30' after the exercise test	PRE: 32.7 ± 7.7 POST: 91.8 ± 21.6 D=Yes
Carr et al. [24]	(0/7)	Women not engaged in physical training programs	18–30	Running, 8 weeks, 1 h/day, 80% HR_{max}	1:00 PM - 6:00 PM	Running	At the beginning and at 30' after the exercise test	PRE: 30.5 ± 4.2 POST: 94.5 ± 10.4 D=Yes
Carr et al. [24]	(0/7)	Women not engaged in physical training programs	18–30	Running, 8 weeks, 1 h/day, 80% HR_{max}	1:00 PM - 6:00 PM	Running	At the beginning and 90' after the exercise test	PRE: 54.7 ± 17.4 POST: 66.3 ± 17.6 D=Yes
Carr et al. [24]	(0/7)	Women not engaged in physical training programs	18–30	Running, 8 weeks, 1 h/day, 80% HR_{max}	1:00 PM - 6:00 PM	Running	At the beginning and 90' after the exercise test	PRE: 32.7 ± 7.7 POST: 63.9 ± 15.6 D=Yes
Carr et al. [24]	(0/7)	Women not engaged in physical training programs	18–30	Running, 8 weeks, 1 h/day, 80% HR_{max}	1:00 PM - 6:00 PM	Running	At the beginning and 90' after the exercise test	PRE: 30.5 ± 4.2 POST: 58.3 ± 10.6 D=Yes
Carlson et al. [23]	(12/0)	Regularly exercised	20.7 ± 0.6	30 min of steady state running at 75% of VO_{2max}	9:00 AM and 4:00 PM	Running	8:00 PM	PRE: 7.6 ± 6.0 POST: 10.6 ± 5.4 D=Yes

Table 3 (continued)

Reference	N° of subjects (♂/♀)	Characteristics of subjects	Age	Exercise protocol	Exercise schedule	Modality	Sample collection time	Result
Carlson et al. [23]	(12/0)	Regularly exercised	20.7 ± 0.6	30 min of steady state running at 75% of VO_{2max}	9:00 AM and 4:00 PM	Running	08:00 PM	PRE: 7.6 ± 6.0 POST: 10.5 ± 6.4 D = Yes
Carlson et al. [23]	(12/0)	Regularly exercised	20.7 ± 0.6	30 min of steady state running at 75% of VO_{2max}	9:00 AM and 4:00 PM	Running	10:00 PM	PRE: 16.6 ± 6.0 POST: 17.0 ± 6.7 D=Yes
Carlson et al. [23]	(12/0)	Regularly exercised	20.7 ± 0.6	30 min of steady state running at 75% of VO_{2max}	9:00 AM and 4:00 PM	Running	10:00 PM	PRE: 16.6 ± 6.0 POST: 13.6 ± 4.0 D=Yes
Carlson et al. [23]	(12/0)	Regularly exercised	20.7 ± 0.6	30 min of steady state running at 75% of VO_{2max}	9:00 AM and 4:00 PM	Running	3:00 AM	PRE: 23.4 ± 5.8 POST: 23.2 ± 4.7 D=Yes
Carlson et al. [23]	(12/0)	Regularly exercised	20.7 ± 0.6	30 min of steady state running at 75% of VO_{2max}	9:00 AM and 4:00 PM	Running	3:00 AM	PRE: 23.4 ± 5.8 POST: 18.2 ± 7.3 D = Yes
Elias et al. [26]	(7/0)	Physically active	-	Bruce multistage protocol	9:30–10:00 AM	Run on treadmill	Pre-exercise and 0' post exercise	PRE: 13.6 ± 4.0 POST: 14.6 ± 6.5 D=Yes
Elias et al. [26]	(7/0)	Physically active	-	Bruce multistage protocol	9:30–10:00 AM	Run on treadmill	Pre-exercise and 15' post exercise	PRE: 13.6 ± 4.0 POST: 12.2 ± 3.9 D=No
Elias et al. [26]	(7/0)	Physically active	-	Bruce multistage protocol	9:30–10:00 AM	Run on treadmill	Pre-exercise and 30' post exercise	PRE: 13.6 ± 4.0 POST: 11.6 ± 2.1 D=No
Elias et al. [26]	(7/0)	Physically active	-	Bruce multistage protocol	9:30–10:00 AM	Run on treadmill	Pre-exercise and 60' post exercise	PRE: 13.6 ± 4.0 POST: 11.6 ± 2.7 D=No
Ronkainen et al. [56]	(0/11)	Runners	32.3 ± 7.5	10 Km race	10:00 AM	Running	Before and immediately after exercise	PRE: 4.1 ± 0.1 POST: 8.1 ± 1.5 D=No

♂, Male, ♀, female, *PRE* Pre-Exercise, *POST* Post-Exercise, *D* statistical difference, VO_{2max} maximal oxygen consumption. *HRmax* maximum heart rate

Table 4 Studies characteristics – Melatonin secretion after physical training

Reference	N° of subjects (♂♀)	Characteristics of subjects	Age	Exercise protocol	Exercise schedule	Modality	Sample collection time	Result
Arikawa et al. [57]	(0/141)	Sedentary young women	18–30	150 min/wk for 16 weeks. 80 – 85% of HR_{max}	—	Aerobic exercise	Serum	Control: 24.7 (21–29) Trained: 27.2 (23–32) D=No
Arikawa et al. [57]	(0/141)	Sedentary young women	18–30	150 min/wk for 16 weeks. 80–85% of HR_{max}	—	Aerobic exercise	24-hour urine	Control: 10.9 (9–13) Trained: 12 (10–14) D=No
Arikawa et al. [57]	(0/141)	Sedentary young women	18–30	150 min/wk for 16 weeks. 80–85% of HR_{max}	—	Aerobic exercise	Overnight	Control: 8.4 (7–10) Trained: 9.4 (8–11) D=No
Cai et al. [58]	(0/19)	Self-reported postmenopausal sedentary women	54–65	Moderate- to high-intensity step aerobics exercise at a frequency of 3 times per week.	8:30 and 10:00 AM	Step	7:30 and 9:30 AM	Control: 5.5 ± 1.4 Trained: 44.4 ± 7.0 D=Yes

♂ Male, ♀ female, HR_{max} maximum heart rate, *D* statistical difference

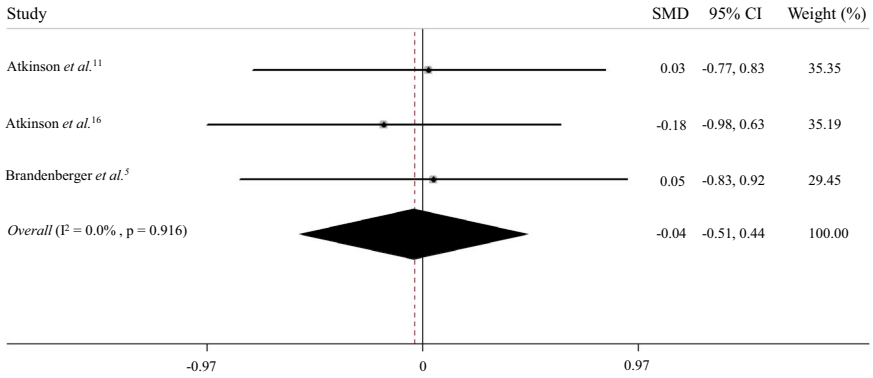

Fig. 2 Forest plot of aerobic performance (relative to time trial) in response to melatonin supplementation. SMD: standardized mean difference. 3 trials (68 individuals)

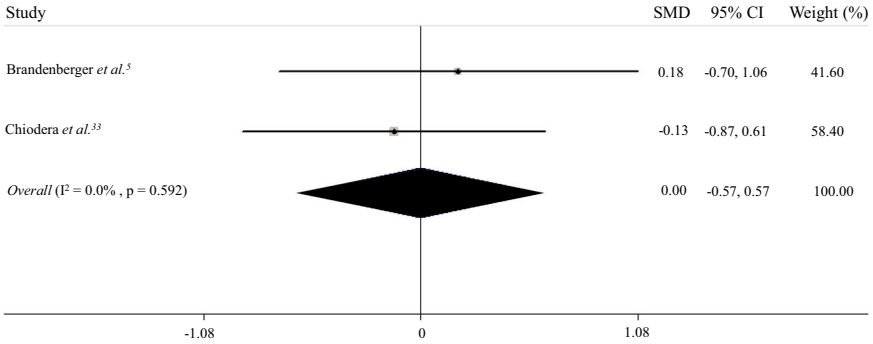

Fig. 3 Forest plot of aerobic performance (relative to VO_2) in response to melatonin supplementation. SMD: standardized mean difference. 2 trials (44 individuals)

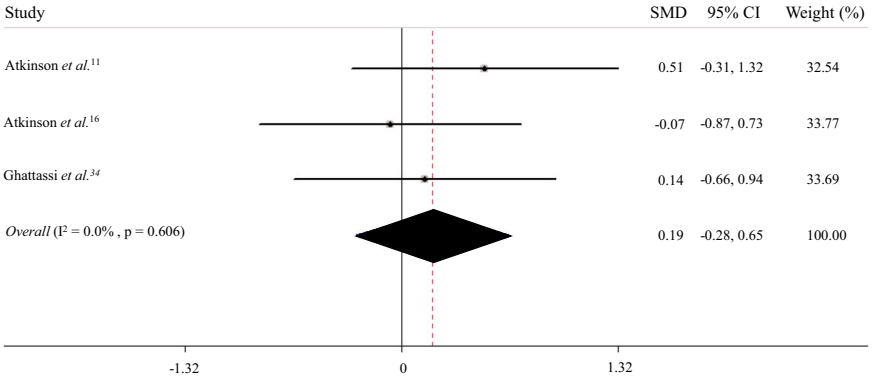

Fig. 4 Forest plot of strength performance (relative to handgrip) in response to melatonin supplementation. SMD: standardized mean difference. 3 trials (72 individuals)

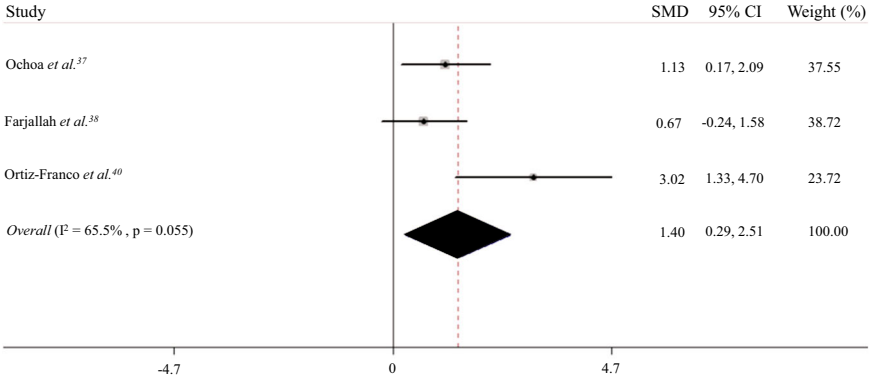

Fig. 5 Forest plot of Glutathione Peroxidase (GPx) in response to melatonin supplementation. SMD: standardized mean difference. 3 trials (54 individuals)

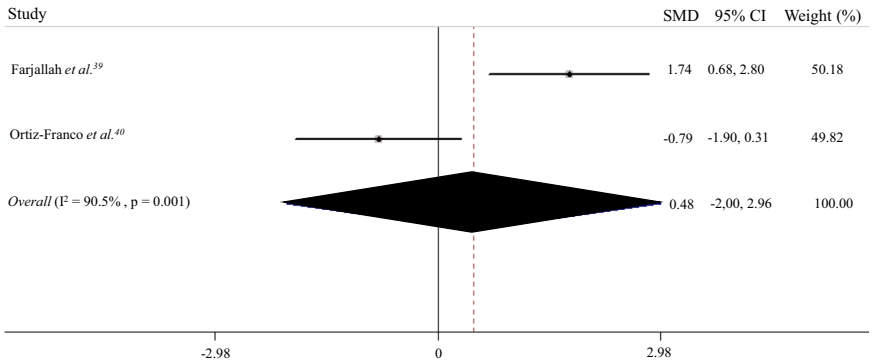

Fig. 6 Forest plot of Superoxide dismutase (SOD) in response to melatonin supplementation. SMD: standardized mean difference. 2 trials (34 individuals)

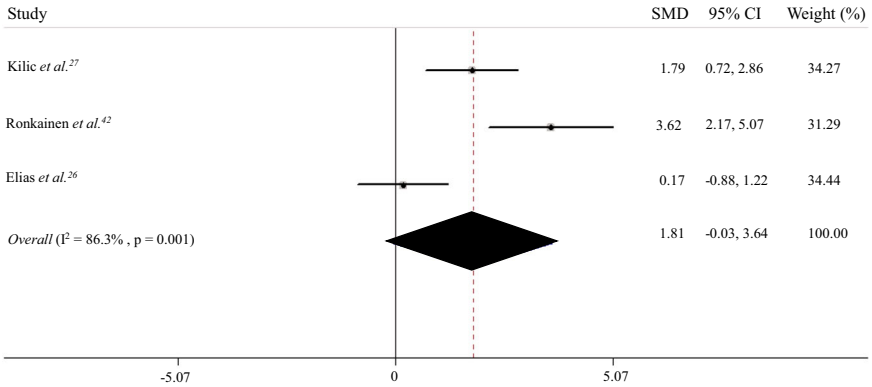

Fig. 7 Forest plot of melatonin secretion after immediately after exercise in response to melatonin supplementation. SMD: standardized mean difference. 3 trials (56 individuals)

[34–37], its anti-ergogenic action on strength performance may be a result of its interference in cognitive and psychomotor skills [33]. Aerobic performance was also not affected by melatonin supplementation, probably because of the lower dosage (5–6 mg).

In this analysis, melatonin supplementation seems to positively affect on exercise recovery (Fig. 5), which may be linked to decreased muscle oxidative stress induced by melatonin [17]. Previous studies have shown that exercise increases the generation of free radicals and reactive oxygen species (ROS) and reactive nitrogen species (RNS), likely rearranging the redox homeostasis towards oxidation and oxidative muscle damage [17, 38, 39]. Thus, muscle fatigue is precipitated, and mechanisms linked to performance recovery are disturbed [40]. In contrast, melatonin and its metabolites are known to have important antioxidant and anti-inflammatory effects, protecting the body from damage caused by ROS and RNS [17, 18, 41–45]. This effect occurs because melatonin stimulates the secretion and activity of several antioxidant enzymes, such as SOD, catalase, GPx, and glutathione reductase [17, 42, 46]. The results presented indicate that only GPx secretion increased after melatonin supplementation, which may be linked to improved post-exercise recovery.

Furthermore, the improvement on physical recovery after an exercise session because of melatonin supplementation may also be explained by other actions of melatonin such as reduced RNA and DNA protein damage [41], lipid peroxidation prevention [47] and polysaccharide destruction [17]. The anti-inflammatory actions caused by melatonin are also essential in the post-exercise recovery process. The suppression of proinflammatory cytokines, such as tumor necrosis factor-alpha and interleukin-1 [46], and up-regulation of anti-inflammatory cytokines secretion, such as interleukin-10 [17] are among the anti-inflammatory actions mediated by melatonin, which seems to be more pronounced when melatonin is ingested before training (Table 2).

Synthesis and secretion of melatonin are stimulated in the dark and depend on the circadian system [17]. In the present study, post-exercise melatonin secretion was not changed after an exercise session, regardless of the time of day (Figs. 7 and 8). In fact, different studies have already shown increased, decreased, or unaltered endogenous secretion of this hormone after exercise [17]. Factors that may alter melatonin production and secretion include: (1) age, diet, light exposure, exercise parameters [48, 49]; (2) exercise characteristics, such as type, volume, intensity, and time of day [23–27]; (3) the timing of sample collection after exercise [17]. All these factors indicate that the results observed herein may be the consequence of the interaction between environmental factors, which affect cellular processes and physiological functions that ultimately play an important physiological role in exercise recovery.

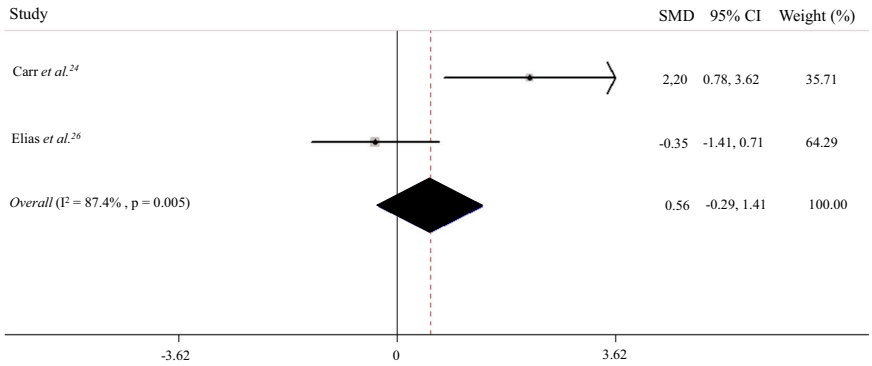

Fig. 8 Forest plot of melatonin secretion 60 min after exercise in response to melatonin supplementation. SMD: standardized mean difference. 2 trials (28 individuals)

Some limitations that may affect the interpretation of the results need to be addressed. The small number of studies available focusing on melatonin supplementation and exercise required individuals to be part of more than one performance measures, and, consequently, of trials, which meant that the same individual was part of more than one trial. Despite such limitations, the present analysis was carried out with discretion and brings consistent and reliable results. Nevertheless, athletes should generally address the results presented herein with caution when adopting a melatonin pattern supplementation to improve exercise performance and recovery.

In conclusion, melatonin supplementation does not have an ergogenic effect. However, melatonin supplementation improves post-exercise recovery. The use of melatonin as a recovery strategy, as well as the physiological role of an eventual post-exercise melatonin increase, should be investigated further.

Supplementary information The online version contains supplementary material available at https://doi.org/10.1007/s12020-023-03498-1.

Acknowledgements This study was supported by Conselho Nacional de Desenvolvimento Científico e Tecnológico (CNPq), Coordenação de Aperfeiçoamento de Pessoal de Nível Superior (CAPES), Fundação de Amparo à Pesquisa do Estado de Minas Gerais (FAPEMIG) and Pró-Reitoria de Pesquisa da Universidade Federal de Minas Gerais. The funding institutions had no role in the study design, data analysis, publication decision, or article preparation.

Author contributions All authors contributed to the development of the research question and study design. F.R.D., L.R.D., H.O.C., and C.C.C. performed the literature search. F.R.D., L.R.D., H.O.C., J.G.R.P.F., M.C.M., H.F.G.L., T.C.A.M., V.N.L., A.B.P., L.H.R.L., M.O.P. and C.C.C. performed the study selection. F.R.D., L.R.D., H.O.C., L.H.R.L., M.O.P. and C.C.C. analyzed the data. All authors interpreted the results and wrote the manuscript. All authors read and approved the final manuscript.

Funding This study was supported by Conselho Nacional de Desenvolvimento Científico e Tecnológico (CNPq), Coordenação de Aperfeiçoamento de Pessoal de Nível Superior (CAPES), Fundação de Amparo à Pesquisa do Estado de Minas Gerais (FAPEMIG) and Pró-Reitoria de Pesquisa da Universidade Federal de Minas Gerais. The funding institutions had no role in the study design, data analysis, decision to publish or preparation of the article.

Compliance with ethical standards

Conflict of interest The authors declare no competing interests.

Ethics approval This is an observational study. The Universidade Federal de Minas Gerais Research Ethics Committee has confirmed that no ethical approval is required.

References

1. D. Acuna-Castroviejo, G. Escames, C. Venegas et al. Extrapineal melatonin: sources, regulation, and potential functions. Cell Mol. Life Sci. **71**, 2997–3025 (2014). https://doi.org/10.1007/s00018-014-1579-2
2. Amaral FGd, Cipolla-Neto JJAoe, metabolism, A brief review about melatonin, a pineal hormone. Arch. Endocrinol. Metab. **62**, 472–479 (2018)
3. J.B. Zawilska, D.J. Skene, J. Arendt, Physiology and pharmacology of melatonin in relation to biological rhythms. Pharmacol Rep. **61**, 383–410 (2009). https://doi.org/10.1016/s1734-1140(09)70081-7
4. M.M. Macchi, J.N. Bruce, Human pineal physiology and functional significance of melatonin. Front Neuroendocrinol. **2**, 177–195 (2004). https://doi.org/10.1016/j.yfrne.2004.08.001
5. K.J. Brandenberger, C.P. Ingalls, J.C. Rupp, J.A. Doyle, Consumption of a 5-mg Melatonin Supplement Does Not Affect 32.2-km Cycling Time Trial Performance. J. Strength Cond. Res. **32**, 2872–2877 (2018). https://doi.org/10.1519/JSC.0000000000001955
6. F. Bonomini, E. Borsani, G. Favero, L.F. Rodella, R. Rezzani (2018) Dietary Melatonin Supplementation Could Be a Promising Preventing/Therapeutic Approach for a Variety of Liver Diseases. Nutrients. 10 https://doi.org/10.3390/nu10091135
7. F. Nduhirabandi, E.F. du Toit, A. Lochner, Melatonin and the metabolic syndrome: a tool for effective therapy in obesity-associated abnormalities. Acta. Physiol. (Oxf) **205**, 209–223 (2012). https://doi.org/10.1111/j.1748-1716.2012.02410.x
8. M. Akbari, V. Ostadmohammadi, R. Tabrizi et al. The effects of melatonin supplementation on inflammatory markers among patients with metabolic syndrome or related disorders: a systematic review and meta-analysis of randomized controlled trials. Inflammopharmacology **26**, 899–907 (2018). https://doi.org/10.1007/s10787-018-0508-7
9. D.-X. Tan, L.C. Manchester, E. Esteban-Zubero, Z. Zhou, R.J.J.M. Reiter, Melatonin as a potent and inducible endogenous

antioxidant: synthesis and metabolism. Molecules **20**(10), 18886–18906 (2015)
10. D. Dawson, S. Gibbon, P. Singh, The hypothermic effect of melatonin on core body temperature: is more better? J Pineal Res. **20**, 192–197 (1996). https://doi.org/10.1111/j.1600-079x.1996.tb00258.x
11. G. Atkinson, P. Buckley, B. Edwards, T. Reilly, J. Waterhouse, Are there hangover-effects on physical performance when melatonin is ingested by athletes before nocturnal sleep. Int. J. Sports Med. **22**, 232–234 (2001). https://doi.org/10.1055/s-2001-16387
12. G. Atkinson, H. Jones, B.J. Edwards, J.M. Waterhouse, Effects of daytime ingestion of melatonin on short-term athletic performance. Ergonomics. **48**, 1512–1522 (2005). https://doi.org/10.1080/00140130500100967
13. H.H. Fullagar, S. Skorski, R. Duffield, D. Hammes, A.J. Coutts, Meyer TJSm. Sleep and athletic performance: the effects of sleep loss on exercise performance, and physiological and cognitive responses to exercise. Biol. Rhythm Res. **45**(2), 161–186 (2015)
14. T.L. Schwenk, Psychoactive drugs and athletic performance. Phys. Sportsmed. **25**, 32–46 (1997). https://doi.org/10.3810/psm.1997.01.1088
15. W.R. Beck, J.D. Botezelli, J.R. Pauli, E.R. Ropelle, Gobatto CAJSr. Melatonin has an ergogenic effect but does not prevent inflammation and damage in exhaustive exercise. Sci. Rep. **5**(1), 1–10 (2015)
16. G. Atkinson, A. Holder, C. Robertson et al. Effects of melatonin on the thermoregulatory responses to intermittent exercise. J. Pineal Res. **39**, 353–359 (2005). https://doi.org/10.1111/j.1600-079X.2005.00256.x
17. J. Kruk, B.H. Aboul-Enein, E. Duchnik, Exercise-induced oxidative stress and melatonin supplementation: current evidence. J. Physiol. Sci. **71**, 27 (2021). https://doi.org/10.1186/s12576-021-00812-2
18. M.A. Farjallah, O. Hammouda, M. Zouch et al. Effect of melatonin ingestion on physical performance, metabolic responses, and recovery after an intermittent training session. Physiol. Int. **105**, 358–370 (2018). https://doi.org/10.1556/2060.105.2018.4.24
19. O. Kaya, M. Kilic, I. Celik, A.K. Baltaci, R. Mogulkoc, Effect of melatonin supplementation on plasma glucose and liver glycogen levels in rats subjected to acute swimming exercise. Pak J. Pharm. Sci. **23**, 241–244 (2010)
20. R.C. Mazepa, M.J. Cuevas, P.S. Collado, J. Gonzalez-Gallego, Melatonin increases muscle and liver glycogen content in non-exercised and exercised rats. Life Sci. **66**(2), 153–160 (2000). https://doi.org/10.1016/s0024-3205(99)00573-1
21. S. Sanchez-Campos, M. Arevalo, M.J. Mesonero, A. Esteller, J. Gonzalez-Gallego, P.S. Collado, Effects of melatonin on fuel utilization in exercised rats: role of nitric oxide and growth hormone. J. Pineal Res. **31**, 159–166 (2001). https://doi.org/10.1034/j.1600-079x.2001.310210.x
22. I. Stratos, N. Richter, R. Rotter et al. Melatonin restores muscle regeneration and enhances muscle function after crush injury in rats. J. Pineal Res. **52**, 62–70 (2012). https://doi.org/10.1111/j.1600-079X.2011.00919.x
23. L.A. Carlson, K.M. Pobocik, M.A. Lawrence, D.A. Brazeau, A.J. Koch, Influence of Exercise Time of Day on Salivary Melatonin Responses. Int. J. Sports Physiol. Perform. **14**, 351–353 (2019). https://doi.org/10.1123/ijspp.2018-0073
24. D.B. Carr, S.M. Reppert, B. Bullen et al. Plasma melatonin increases during exercise in women. J. Clin. Endocrinol. Metab. **53**, 224–225 (1981). https://doi.org/10.1210/jcem-53-1-223
25. A. Konarska, J. Karolkiewicz, Z. Kasprzak, P-S. ŁJSiPC, Tourism (2006) Changes In Melatonin Concentration After Physical Exercise Of Variable Intensity. Revista Brasileira de Medicina do Esporte. 13(2)
26. A. Elias, A. Wilson, M. Pandian et al. Melatonin and gonadotropin secretion after acute exercise in physically active males. European J Appl. Physiol. Occup. Physiol. **66**(4), 357–361 (1993)
27. M. Kilic, B. Demirhan, S. Patlar, A.K. Baltaci, Mogulkoc RJRBdMdE. Effects of diurnal and nocturnal strenuous exercise on serum melatonin levels. Revista Brasileira de Medicina do Esporte **22**, 436–438 (2016)
28. A. Liberati, D.G. Altman, J. Tetzlaff et al. The PRISMA statement for reporting systematic reviews and meta-analyses of studies that evaluate health care interventions: explanation and elaboration. J. Clin. Epidemiol. **62**(10), e1–e34 (2009)
29. D. Moher, A. Liberati, J. Tetzlaff, D.G. Altman, medicine PGJAoi. Preferred reporting items for systematic reviews and meta-analyses: the PRISMA statement. Annals Int. Med. **151**(4), 264–269 (2009)
30. H.O. Campos, L.R. Drummond, Q.T. Rodrigues et al. Nitrate supplementation improves physical performance specifically in non-athletes during prolonged open-ended tests: a systematic review and meta-analysis. British J. Nutr. **119**(6), 636–657 (2018)
31. G.H. Guyatt, A.D. Oxman, G.E. Vist et al. GRADE: an emerging consensus on rating quality of evidence and strength of recommendations. BMJ. **336**(7650), 924–926 (2008)
32. Cohen J, Statistical power analysis Jbr the behavioral. *Sciences Hillsdale (NJ): Lawrence Erlbaum Associates*. 18–74 (1988)
33. K. Ghattassi, A. Graja, O. Hammouda et al. Effect of nocturnal melatonin ingestion on short-term anaerobic performance in soccer players. Biol. Rhythm Res. **45**(6), 885–893 (2014)
34. A. Cagnacci, J.A. Elliott, S.S. Yen, Melatonin: a major regulator of the circadian rhythm of core temperature in humans. J. Clin. Endocrinol. Metab. **75**, 447–452 (1992). https://doi.org/10.1210/jcem.75.2.1639946
35. A.B. Dollins, I.V. Zhdanova, R.J. Wurtman, H.J. Lynch, M.H. Deng, Effect of inducing nocturnal serum melatonin concentrations in daytime on sleep, mood, body temperature, and performance. Proc. Natl Acad. Sci. **91**(5), 1824–1828 (1994)
36. K. Reid, C. Van Den Heuvel, D. Dawson, Day-time melatonin administration: effects on core temperature and sleep onset latency. J. Sleep Res. **5**(3), 150–154 (1996)
37. J. Waterhouse, T. Reilly, G. Atkinson, Melatonin and jet lag. British J. Sports Med. **32**(2), 98 (1998)
38. S.K. Powers, R. Deminice, M. Ozdemir, T. Yoshihara, M.P. Bomkamp, H. Hyatt, Exercise-induced oxidative stress: Friend or foe? J. Sport Health Sci. **9**(5), 415–425 (2020)
39. H. Sies, Oxidative stress: a concept in redox biology and medicine. Redox Biol. **4**, 180–183 (2015)
40. M.A. Smith, M.B. Reid, Redox modulation of contractile function in respiratory and limb skeletal muscle. Respiratory Physiol. Neurobiol. **151**(2-3), 229–241 (2006)
41. M. Ortiz-Franco, E. Planells, B. Quintero et al. Effect of melatonin supplementation on antioxidant status and DNA damage in high intensity trained athletes. Int. J Sports Med. **38**(14), 1117–1125 (2017)
42. L.D.S. Borges, A. Dermargos, E.P.D.S. Junior, E. Weimann, R.H. Lambertucci, E. Hatanaka, Melatonin decreases muscular oxidative stress and inflammation induced by strenuous exercise and stimulates growth factor synthesis. J. Pineal Res. **58**(2), 166–172 (2015)
43. R.C. Leonardo-Mendonça, J. Ocaña-Wilhelmi, T. de Haro et al. The benefit of a supplement with the antioxidant melatonin on redox status and muscle damage in resistance-trained athletes. Appl. Physiol. Nutr. Metabol. **42**(7), 700–707 (2017)
44. M. Maldonado, M. Manfredi, J. Ribas-Serna, H. Garcia-Moreno, J. Calvo, Melatonin administrated immediately before an intense exercise reverses oxidative stress, improves immunological defenses and lipid metabolism in football players. Physiol. Behav. **105**(5), 1099–1103 (2012)

45. F. Ziaadini, M. Aminae M., M.M. Rastegar, S. Abbasian, A.H. Memari, Sciences N. Melatonin supplementation decreases aerobic exercise training induced-lipid peroxidation and malondialdehyde in sedentary young women. Polish J. Food Nutr. Sci. 2017;67(3)
46. J.J. Ochoa, J. Díaz-Castro, N. Kajarabille et al. Melatonin supplementation ameliorates oxidative stress and inflammatory signaling induced by strenuous exercise in adult human males. J. Pineal Res. **51**(4), 373–380 (2011)
47. D. Sagan, J. Stepniak, A. Gesing, A. Lewinski, M. Karbownik-Lewinska, Melatonin reverses the enhanced oxidative damage to membrane lipids and improves skin biophysical characteristics in former-smokers—a study in postmenopausal women. Annals Agric. Environ. Med. **24**(4), 659–666 (2017)
48. K. Peuhkuri, N. Sihvola, R. Korpela, Dietary factors and fluctuating levels of melatonin. Food Nutr. Res. **56**(1), 17252 (2012)
49. B. Rzepka-Migut, J. Paprocka, Melatonin-measurement methods and the factors modifying the results. A systematic review of the literature. Int. J. Environ. Res. Pub. Health **17**(6), 1916 (2020)
50. P. Chiodera, R. Volpi, L. Capretti, N. Giuliani, M. Maffei, V. Coiro, Effect of melatonin on arginine vasopressin secretion stimulated by physical exercise or angiotensin II in normal men. Neuropeptides. **32**(2), 125–129 (1998)
51. A.A. Mero, M. Vähälummukka, J.J. Hulmi, P. Kallio, A. von Wright, Effects of resistance exercise session after oral ingestion of melatonin on physiological and performance responses of adult men. European J Appl. Physiol. **96**(6), 729–739 (2006)
52. C.P. Trionfante, G.R. Davis, T.M. Farney, R.W. Miskowiec, A.G. Nelson, A pre-exercise dose of melatonin can alter substrate use during exercise. Int. J. Exercise Sci. **10**(7), 1029 (2017)
53. M.A. Farjallah, K. Ghattassi, L. Ben Mahmoud et al. Effect of nocturnal melatonin intake on cellular damage and recovery from repeated sprint performance during an intensive training schedule. Chronobiology Int. **37**(5), 686–698 (2020)
54. M.A. Farjallah, O. Hammouda, L. Ben Mahmoud et al. Melatonin supplementation ameliorates oxidative stress, antioxidant status and physical performances recovery during a soccer training camp. Biological Rhythm Res. **51**(3), 441–452 (2018)
55. Ziaadini F., Aminae M., Rastegar M.M., Abbasian S., Memari A.H. (2017) Melatonin supplementation decreases aerobic exercise training induced-lipid peroxidation and malondialdehyde in sedentary young women. Polish J. Food Nutrition Sci. 67(3)
56. H. Ronkainen, O. Vakkuri, A. Kauppila, Effects of physical exercise on the serum concentration of melatonin in female runners. Acta Obstetricia et Gynecologica Scandinavica **65**(8), 827–829 (1986)
57. A.Y. Arikawa, W. Thomas, S.R. Patel, M.S. Kurzer, P. Biomarkers, No effect of exercise on urinary 6-sulfatoxymelatonin and catecholamines in young women participating in a 16-week randomized controlled trial. Cancer Epidemiol. **22**(9), 1634–1636 (2013)
58. Z.-Y. Cai, K.W.-C. Chen, H.-J. Wen, Effects of a group-based step aerobics training on sleep quality and melatonin levels in sleep-impaired postmenopausal women. J.Strength Conditioning Res. **28**(9), 2597–2603 (2014)

Publisher's note Springer Nature remains neutral with regard to jurisdictional claims in published maps and institutional affiliations.

Springer Nature or its licensor (e.g. a society or other partner) holds exclusive rights to this article under a publishing agreement with the author(s) or other rightsholder(s); author self-archiving of the accepted manuscript version of this article is solely governed by the terms of such publishing agreement and applicable law.